WA-001C2

WA-001 LED Beacon

DESCRIPTION
Low Current Consumption
PC Lens with Smooth Exterior Will Not Gather Dirt and Dust
Uniform 360 Degree Light Distribution---No Dark Spots
Magnetic Mount Use Up to 50mph/80kph
Base material: ADC12, Black powder coated

VOLTAGE 10-30V

POWER CONSUMPTION 23W

MOUNT Flange/Magnetic mount (8 pcs magnets) /Single pipe

APPROVALS ECE R65(Amber)/ R10(EMC)

LENS COLOR Clear or Color

WARRANTY 3 Years

WATERPROOF IP 67

OPERATING TEMPERATURE -40° C to +65° C

PACKAGING Net Weight: 0.64KG Innerbox: mm
Outer Packing Carton: mm Packing Qty: PCS/CTN

PART NUMBER	COLOR	MOUNT	APPROVALS	LEDs	OUTER LENS COLOR
WA-001C2A		Flange/ Magnetic mount(8 pcs magnets)/ Single Bolt	ECE R65/ R10(EMC)	24 PCS 0.5W SMD Amber	Clear or Color
WA-001C2B			ECE R10(EMC)	24 PCS 0.5W SMD Blue	
WA-001C2R			ECE R10(EMC)	24 PCS 0.5W SMD Red	
WA-001C2W			ECE R10(EMC)	24 PCS 0.5W SMD White	

FLASH PATTERNS	
Flash patterns	FPM (Flashes per minute)
Single	150
Double	74
Triple	76
Quad	75
Rotate	143

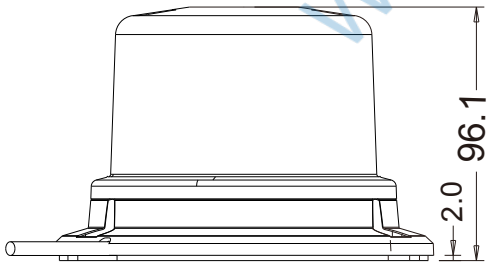

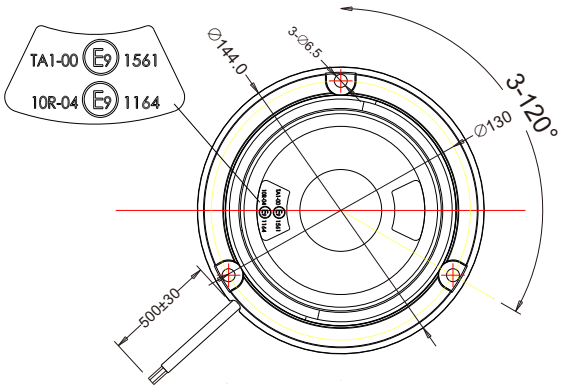

LED BEACON

FordaLite
WWW.FORDA-LED.COM